| DRAWING NUMBER | PDUP-FM-050PVC-M101-S-0 | 1 | 1 |
|---|---|---|---|
| REV | REVISION DESCRIPTION | DATE | APP |
| 0 | FOR APPROVAL | 6/26/2026 | JR |

| | |
|---|---|
| BALL VALVE N.O. | |
| BALL VALVE N.C. | |
| Y-STRAINER | |
| REDUCER | |
| CONNECTOR | |
| PRESSURE RELIEF VALVE | |
| PRESSURE GAUGE WITH DIAPHRAGM SEAL | PI |
| BACK PRESSURE VALVE | |
| ANALOG SIGNAL (4-20mA DC) | |
| DIGITAL SIGNAL | |
| SUPPLY POWER | |

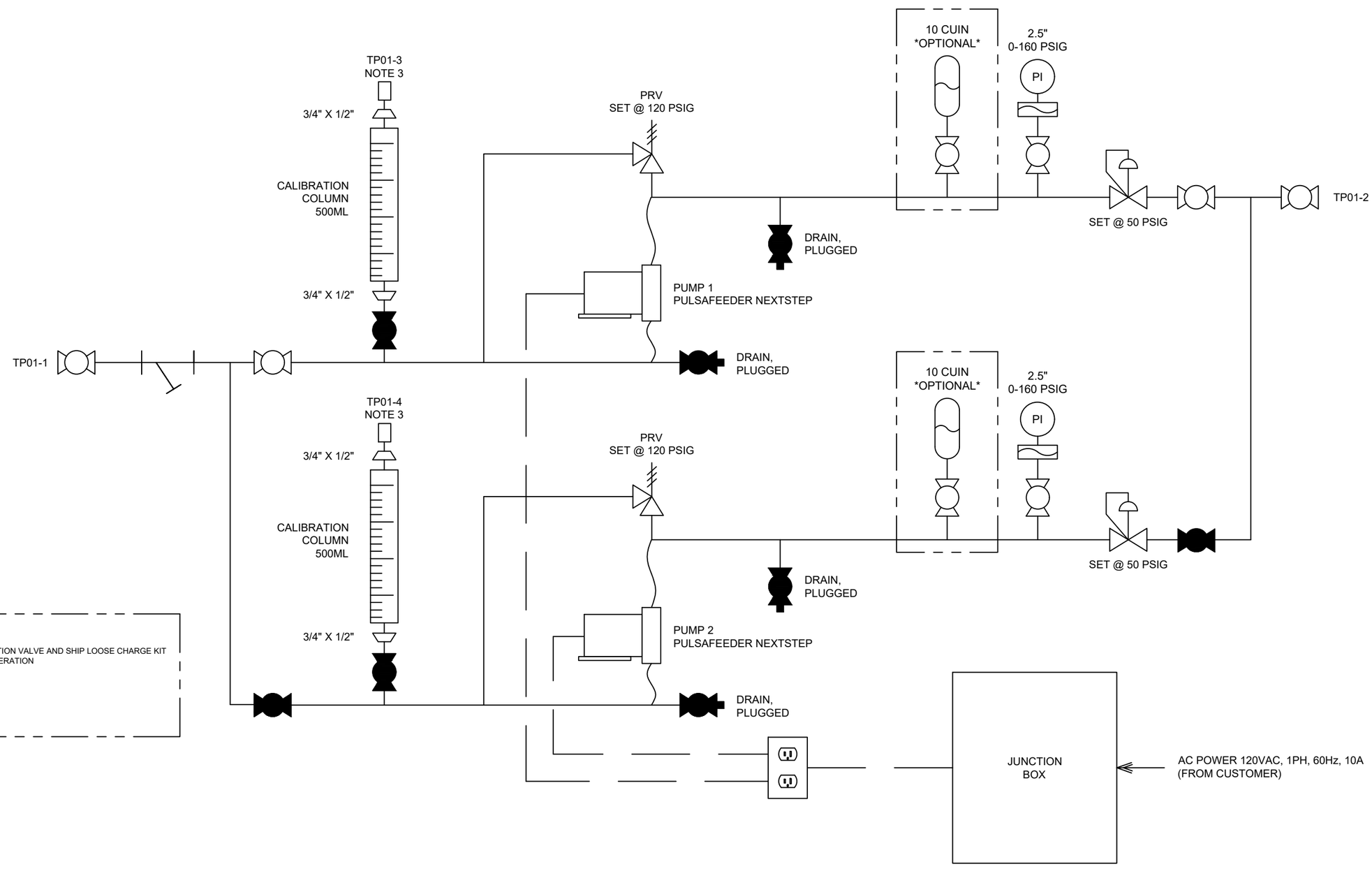


ADDITIONAL OPTIONS:

1) 10 CUIN PULSATION DAMPENER WITH ISOLATION VALVE AND SHIP LOOSE CHARGE KIT
2) LOCAL CONTROL PANEL FOR TWO-PUMP OPERATION
3) SYSTEM AVAILABLE IN OTHER MATERIALS -
   - CPVC
   - PVC (VENTED BALL VALVES)
   - CPVC (VENTED BALL VALVES)
   - PVDF
   - SS

CONNECTIONS:

TP01-1 - SYSTEM INLET - 1/2" F-NPT
TP01-2 - SYSTEM OUTLET 1 - 1/2" F-NPT
TP01-3 - CAL. COLUMN VENT - 1/2" F-NPT
TP01-4 - CAL. COLUMN VENT - 1/2" F-NPT

NOTES:

1. ALL PIPING - PVC, SCH. 80
2. ALL FITTINGS - PVC, SCH. 80, SW, VITON OR EPDM O-RINGS
3. CAL. COLUMN VENT TO BE ROUTED BACK TO TANK IN FIELD BY OTHERS

| SUFFIX | PART NUMBER LESS SUFFIX | QTY | DESCRIPTION OR MATERIAL | ITEM |
|---|---|---|---|---|
| 000 | PDUP-FM-050PVC-M101-S | -- | - | -- |

PULSAFEEDER

INTERPRET GEOMETRIC TOLERANCING PER: ASME Y14.5M-1994

| TOLERANCE UNLESS OTHERWISE SPECIFIED | | MACHINED |
|---|---|---|
| XX in | ± 0.030 in | SURFACES |
| XXX in | ± 0.005 in | ROUGHNESS |
| XXXX in | ± 0.005 in | 125 |
| ANGLES | ± 1/2° | |

BREAK ALL SHARP EDGES .005 in MAX.
ALL DIMENSIONS IN INCHES

PROPRIETARY DATA: THIS DOCUMENT DISCLOSES INFORMATION AND DATA IN WHICH PULSAFEEDER HAS PROPRIETARY RIGHTS. THE RIGHT TO REPRODUCE, USE OR DISCLOSE IN WHOLE OR IN PART EXCEPT BY WRITTEN PERMISSION IS PROHIBITED.

| PROJECT NUMBER | DWN | PW | 6/26/2026 |
|---|---|---|---|
| PULSAFEEDER STANDARDS | | | |
| ECN: N/A | APP | JR | 6/26/2026 |

TITLE: DUPLEX CHEMICAL FEED SKID
PVC, 1/2", FLOOR MOUNTED
P. & I. DRAWING

FILE: PDUP-FM-050PVC-M101-S | SCALE: NONE | SHEET 1 OF 1 | SIZE D