DRAWING NUMBER	PSIM-FM-050PVC-M101-S-0	1	1
REV	REVISION DESCRIPTION	DATE	APP
0	FOR APPROVAL	6/26/2026	JR

BALL VALVE N.O.	
BALL VALVE N.C.	
Y-STRAINER	
REDUCER	
CONNECTOR	
PRESSURE RELIEF VALVE	
PRESSURE GAUGE WITH DIAPHRAGM SEAL	PI
BACK PRESSURE VALVE	
ANALOG SIGNAL (4-20mA DC)	
DIGITAL SIGNAL	
SUPPLY POWER	

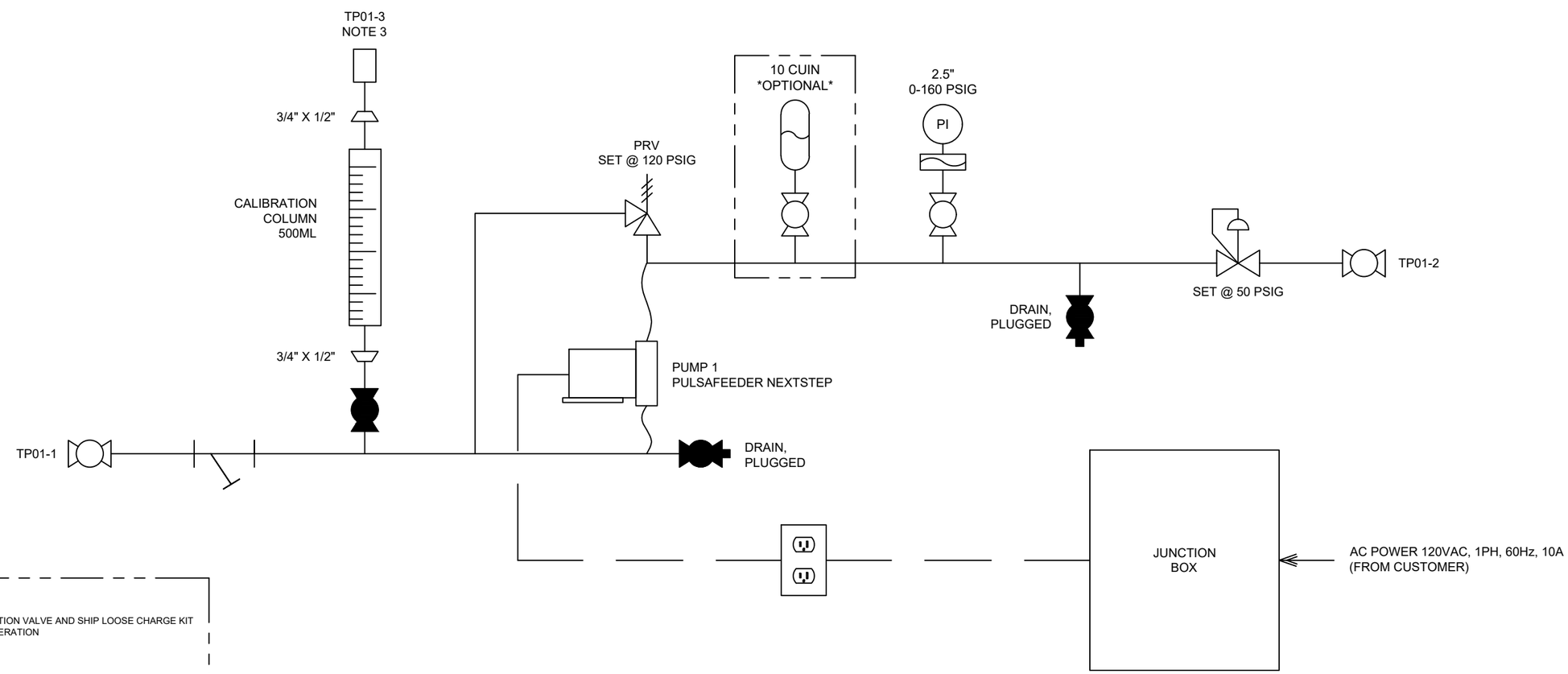

ADDITIONAL OPTIONS:

1) 10 CUIN PULSATION DAMPENER WITH ISOLATION VALVE AND SHIP LOOSE CHARGE KIT
2) LOCAL CONTROL PANEL FOR ONE-PUMP OPERATION
3) SYSTEM AVAILABLE IN OTHER MATERIALS -
   - CPVC
   - PVC (VENTED BALL VALVES)
   - CPVC (VENTED BALL VALVES)
   - PVDF
   - SS

CONNECTIONS:

TP01-1 - SYSTEM INLET - 1/2" F-NPT
TP01-2 - SYSTEM OUTLET - 1/2" F-NPT
TP01-3 - CAL. COLUMN VENT - 1/2" F-NPT

NOTES:

1. ALL PIPING - PVC, SCH. 80
2. ALL FITTINGS - PVC, SCH. 80, SW, VITON OR EPDM O-RINGS
3. CAL. COLUMN VENT TO BE ROUTED BACK TO TANK IN FIELD BY OTHERS

SUFFIX	PART NUMBER LESS SUFFIX	QTY	DESCRIPTION OR MATERIAL	ITEM
000	PSIM-FM-050PVC-M101-S	--	-	--

PULSAFEEDER

INTERPRET GEOMETRIC TOLERANCING PER: ASME Y14.5M-1994

TOLERANCE UNLESS OTHERWISE SPECIFIED — MACHINED
XX in ± 0.010 in — SURFACES
XXX in ± 0.005 in — ROUGHNESS
XXXX in ± 0.005 in — 125
ANGLES ± 1°30'
BREAK ALL SHARP EDGES .015 in MAX.
ALL DIMENSIONS IN INCHES

PROPRIETARY DATA: THIS DOCUMENT DISCLOSES INFORMATION AND DATA IN WHICH PULSAFEEDER HAS PROPRIETARY RIGHTS. THE RIGHT TO REPRODUCE, USE OR DISCLOSE IN WHOLE OR IN PART EXCEPT BY WRITTEN PERMISSION IS PROHIBITED.

PROJECT NUMBER: PULSAFEEDER STANDARDS	DWN	PW	6/26/2026
ECN: N/A	APP	JR	6/26/2026

TITLE: SIMPLEX CHEMICAL FEED SKID
PVC, 1/2", FLOOR MOUNTED
P. & I. DRAWING

FILE	SCALE	SHEET	OF	SIZE
PSIM-FM-050PVC-M101-S	NONE	1	1	D