ECLIPSE® 05

NON-METALLIC EXTERNAL GEAR PUMP

Eclipse pumps represent a dramatic advance in pump technology. Combining proven design principles with state-of-the-art engineered composites, it is the most safe, simple, and reliable pump on the market today. Service takes minutes, reducing process downtime and maintenance costs. It is commonly used for applications in industries such as chemical processing, petrochemical, and water treatment.

Applications
- pH control
- odor control
- acids
- caustics

Flow
up to 1.6 gpm (6.1 lpm)

Pressure
up to 150 psi (10.3 bar)

Temperature
up to 200°F (93°C)*
*with derated pressure

- No mechanical seals needed because of magnetically driven, engineered composite housings and gears
- Close coupled mounting eliminates cost and potential issues associated with pump and motor alignment
- Bi-directional and mounting in 45° increments

Zero Leakage
- Fully encapsulated magnets
- Engineered composite fluoropolymer provides superior chemical resistance
- Zero emissions of hazardous or regulated chemicals

Built for the harshest environments
- Ideal fit for many medium to highly corrosive liquids

Ease of Maintenance
- Front pull-out design for quick and easy service
- Piping and electrical stay intact
- KOPkit® (Keep On Pumping kit) saves time and money
- Simplified orders and inventory
- Reduced downtime

Controls
- Pulsafeeder RV Controller: Intelligent Motor Speed

PULSAFEEDER®

SPECIFICATIONS

Gear type	External spur gear
Port size & type	3/8” NPT or BSPT
Direction of rotation	Bi-directional
Theoretical displacement	0.113 US gal / 100 Rev (4.3 / Rev)
Max differential pressure	150 psi (10.3 bar)
Max allowable working pressure	200 psi (13.8 bar)
Max speed	1750 RPM
Max flow	1.6 gpm (6.1 lpm)
Viscosity	5,000 cPs
Max temp	up to 200°F (93°C)*
Min temp	-40°F (-40°C)
Bearing type	Sleeve bearing
Magnetic torque rating @ 68°F (20°C)	228 in/lbs. (25.7 N-m)
Magnetic temp rating	300°F (149°C)
Motor frame size	NEMA 56C, 143/145TC, IEC 63 and 80 B3/B14
Pump weight	8.9 lbs. (4.0 kg) less motor, approximate
Standards	NSF, ATEX, CE

*with derated pressures

MATERIALS OF CONSTRUCTION

Base material	PVDF
Liner	Carbon Reinforced PTFE
Bearings	Carbon (Graphite), Silicon carbide (Graphite-impregnated)
O-rings	Viton®, EPDM, or Perfluoroelastomer
Shafts	Alumina Ceramic
Drive gear	Carbon reinforced PTFE
Idler gear	Carbon reinforced PTFE
Magnet	Neodymium encapsulated virgin PTFE

DIMENSIONS

Inches
Millimeters

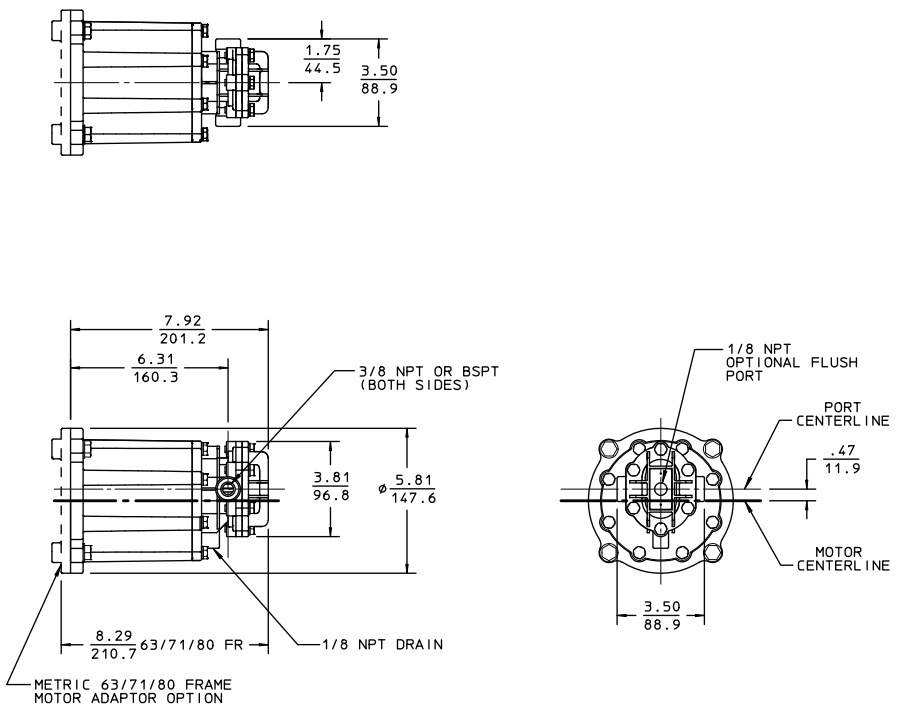

The dimensions given may differ depending on pump configuration.

FLOW & PRESSURE ENVELOPE

(1 cPs, 1/2 HP / .55 kW, Specific Gravity 1.0)

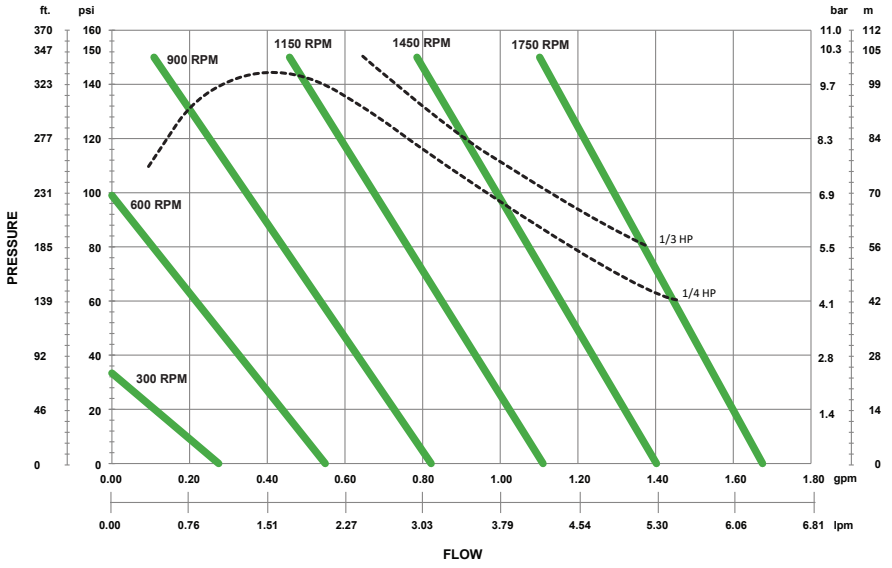

Pulsafeeder, Inc.
2883 Brighton Henrietta Town Line Rd.
Rochester, NY 14623
Phone: +1 (585) 292-8000
pulsa@idexcorp.com • **pulsafeeder.com**

Pulsafeeder is an ISO 9001 Certified Company.

© Copyright 2023 Pulsafeeder. All rights reserved.